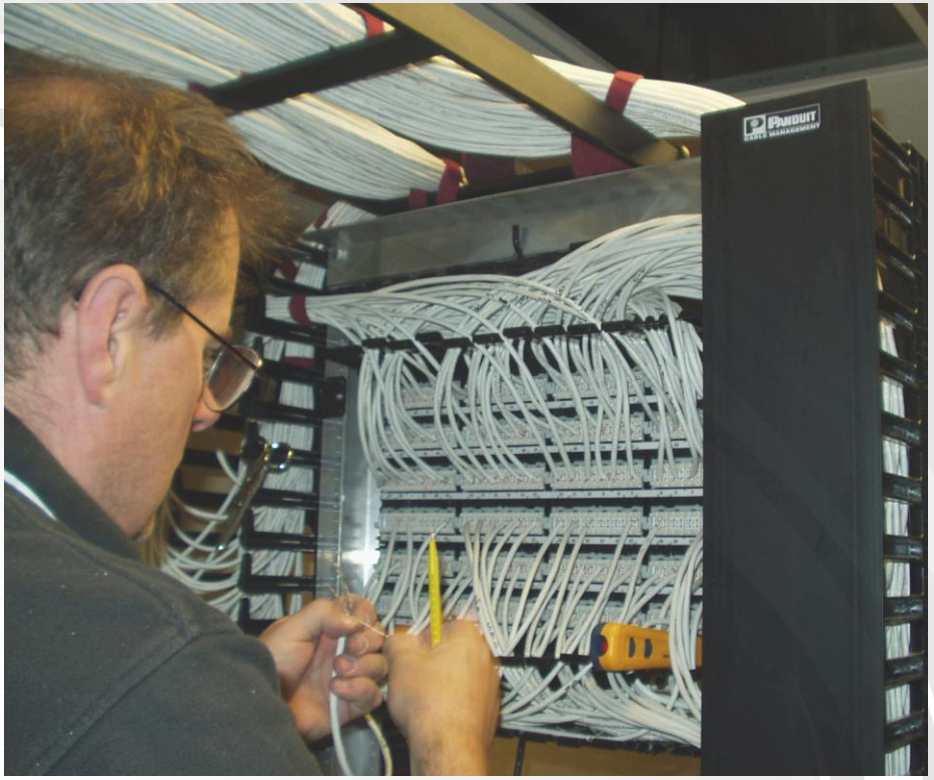

BIS

Install 122 CAT 6 Voice/Data Cable Drops

and an AVAYA IP Office VoIP System

Oakbrook Terrace, IL

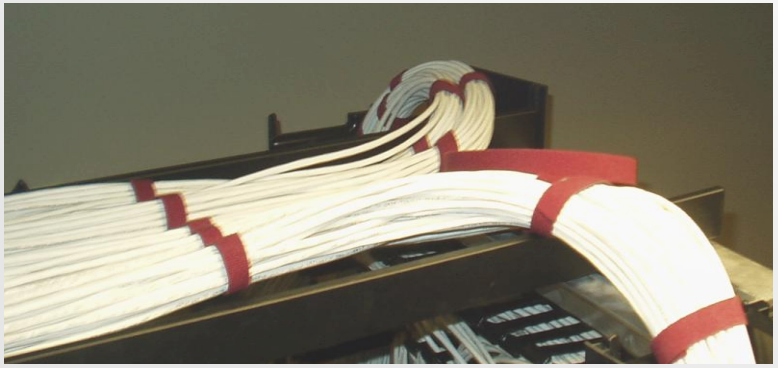

BISHOP COMPUTER CORP.
(847) 781-9475

BIS VoIP System Layout

Oakbrook Terrace, IL	11/11/2010

Components

AVAYA IP Office VoIP
Release 6.0
Category 6 Structured Cabling
48 Port PoE switch
HP DL320 G6 Voicemail Server

9640 Handsets (25qty)

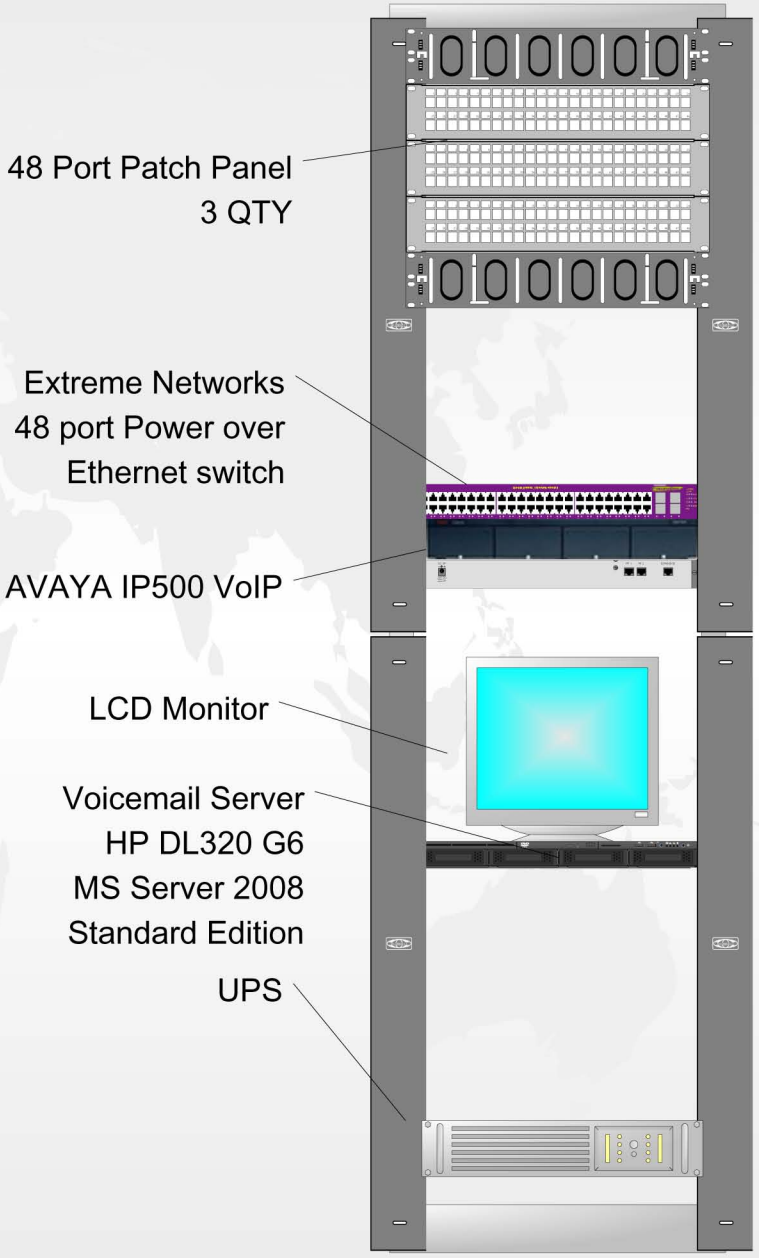

BISHOP COMPUTER CORP.
(847) 781-9475